adbri MASONRY

an ADBRI company

LANDSCAPE SOLUTIONS

Retaining Walls

SOUTH QUEENSLAND

Jason Hodges is Adbri's DIY landscaping expert. Jason has over 20 years experience as a landscaper and more recently, an international award winning landscape designer.

Australia's Leading Masonry Manufacturer

Adbri produces an innovative range of architecturally inspired concrete products for use in residential and commercial landscaping applications. This premium range of concrete retaining walls and garden edging products are proven performers and can be used to enhance your home.

Adbri has a retaining wall or garden edging solution for every landscaping project.

TABLE OF CONTENTS

Retaining Wall Selection Guide	4
Versawall®	6
Natural Impressions® Duostone	8
Natural Impressions® Flagstone	10
Versaloc®	12
Meadow Stone	14
Miniwall®	16
Manor Stone	18
Windsor™ Stone	20
Hudson Stone	22
Lawn Edge	24
Torpedo™ Base Block	26
How to Build a Retaining Wall	29
General Step by Step Guide	30
Typical Installation Details	32

AUSTRALIAN MADE MASONRY
QUALITY CONCRETE PRODUCTS BUILT TO LAST.

Your Retaining Wall Selection Guide

Look for these icons throughout the brochure

CREATE CURVES

Natural Impressions® Duostone

Page 8

Natural Impressions® Flagstone

Page 10

Meadow Stone

Page 14

Miniwall®

Page 16

STEPS

Versawall®

Page 6

Natural Impressions® Duostone

Page 8

Natural Impressions® Flagstone

Page 10

Versaloc®

Page 12

VERTICAL WALLS

Versawall®

Page 6

Versaloc®

Page 12

Miniwall®

Page 16

SETBACK WALLS

Natural Impressions® Duostone

Page 8

Natural Impressions® Flagstone

Page 10

Meadow Stone

Page 14

Manor Stone

Page 18

GARDEN EDGING

Lawn Edge

Page 26

Natural Impressions® Duostone

Page 8

Natural Impressions® Flagstone

Page 10

Miniwall®

Page 16

GARDEN BEDS

Versawall®

Page 6

Natural Impressions® Duostone

Page 8

Natural Impressions® Flagstone

Page 10

Meadow Stone

Page 14

It's important to select the right product for your project, to do the job once and to do it well.

DID YOU KNOW ...

All of Adbri Masonry's retaining wall products can be used to create fire pits, however a minimum 500mm of clear distance between the flame and the rear of the block must be maintained at all times.

Manor Stone

Page 18

Windsor™ Stone

Page 20

Hudson Stone

Page 22

Meadow Stone

Page 14

Windsor™ Stone

Page 20

Windsor™ Stone

Page 20

Hudson Stone

Page 22

Manor Stone

Page 18

Windsor™ Stone

Page 20

Hudson Stone

Page 22

Miniwall®

Page 16

Manor Stone

Page 18

Windsor™ Stone

Page 20

Hudson Stone

Page 22

GENTLE CURVES | GARDEN BEDS | STEPS | ENGINEER FOR HIGHER WALLS | VERTICAL WALLS | SUITABLE WITH TORPEDO™ | UNREINFORCED HEIGHT 800MM MAX HEIGHT ENGINEERED 1400MM

Versawall®

The Versawall® system is a DIY dream with interlocking joints and stacking lugs making installation easier than ever before. Build vertical walls to 800mm without reinforcement or reach 1400mm high with engineering and No Fines Concrete.

Oatmeal

Sunstone

Charcoal

Due to natural variations in the raw materials we use, colours may vary from batch to batch. Always sight a physical sample before purchase.

Versawall® Standard Unit

No. per m²	12.5 units
Approx. Weight	20.75kg
No. per pallet	60

Versawall® Corner Unit

No. per m²	–
Approx. Weight	21.8kg
No. per pallet	60 (30 Left, 30 Right)

Right corner shown.
Available in left and right hand units.

Versawall® Capping Unit

No. per l/m	3.3 units
Approx. Weight	8.5kg
No. per pallet	144

- ✔ Traditional look with large rock face texture
- ✔ Specialty corner units and cap form a complete system
- ✔ Space saving, vertical construction
- ✔ DIY-friendly with lugs and joints for easier stacking

TIP
To finish walls, remove lugs from top course with bolster and glue down capping unit.

Scan to watch how.

Maximum Unreinforced Height - 800mm + cap (4 courses) or up to 1400mm + cap (7 courses) with No Fines Concrete

Consult your local council for all walls over 800mm in height

CREATE CURVES | GARDEN EDGING | STRAIGHT WALLS | GARDEN BEDS | STEPS | SETBACK WALLS | SUITABLE WITH TORPEDO™ | UNREINFORCED HEIGHT 700MM MAX HEIGHT ENGINEERED 1500MM

Natural Impressions® Duostone

Duostone blocks are a fusion of ultra-modern smooth surfaces with the timeless appeal of textured natural stone to create beautiful walls. Choose Duostone for statement walls and enjoy this architectural feature in your home.

Ash

Graphite

Due to natural variations in the raw materials we use, colours may vary from batch to batch. Always sight a physical sample before purchase.

Natural Impressions® Duostone Block

No. per m^2	33.33 units
Approx. Weight	9.5kg
No. per pallet	168

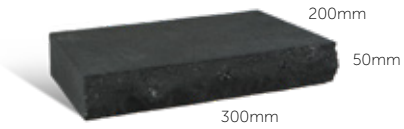

Natural Impressions® Duostone Cap

No. per l/m	3.33 units
Approx. Weight	5.94kg
No. per pallet	216

- ✔ Each block features contrasting smooth and textured elements
- ✔ Highly desirable natural stone-like aesthetic
- ✔ Complementary colours including the ultra rich Graphite colour
- ✔ Create beautiful serpentine arcs as well as easy curves and straight walls

Maximum Unreinforced Height - 700mm + cap (7 courses)
or up to 1500mm + cap (15 courses) with reinforcement
Consult your local council for all walls over 800mm in height

CREATE CURVES | GARDEN EDGING | STRAIGHT WALLS | GARDEN BEDS | STEPS | SETBACK WALLS | SUITABLE WITH TORPEDO™ | UNREINFORCED HEIGHT 700MM MAX HEIGHT ENGINEERED 1500MM

Natural Impressions® Flagstone

These premium garden wall blocks replicate the beautiful look of natural stacked stone. The rear lip stacking system provides ease of installation, with the durability of concrete to deliver a superior result for your project.

Sandstone | Ironstone | Bluestone

Due to natural variations in the raw materials we use, colours may vary from batch to batch. Always sight a physical sample before purchase.

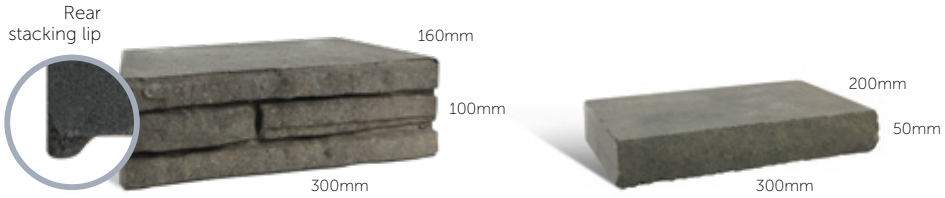

Natural Impressions® Flagstone Block	
No. per m²	33.33 units
Approx. Weight	9.49kg
No. per pallet	144

Natural Impressions® Flagstone Cap	
No. per l/m	3.33 units
Approx. Weight	5.95kg
No. per pallet	216

- ✔ DIY blocks feature a ‘rear lip’ which makes them easy to stack
- ✔ Blended colours for a more natural stone look
- ✔ Varying face profiles mean walls take on a truly random, natural appearance
- ✔ Create beautiful serpentine arcs as well as easy curves and straight walls

Maximum Unreinforced Height - 700mm + cap (7 courses)
or up to 1500mm + cap (15 courses) with reinforcement
Consult your local council for all walls over 800mm in height

GARDEN BEDS | STEPS | ENGINEER FOR HIGHER WALLS | VERTICAL WALLS | SUITABLE WITH TORPEDO™ | UNREINFORCED HEIGHT 600MM MAX HEIGHT ENGINEERED 1200MM

Versaloc®

This dry stack walling system is an innovative solution for residential landscaping projects. No mortar is required and blocks easily stack on top of each other ensuring quick and easy wall construction.

Natural

Due to natural variations in the raw materials we use, colours may vary from batch to batch. Always sight a physical sample before purchase.

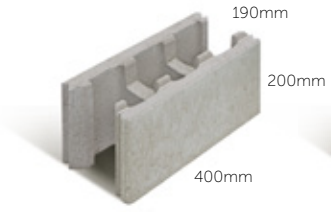

Versaloc® Standard Unit

No. per m²	12.5 units
Approx. Weight	15.6kg
No. per pallet	144

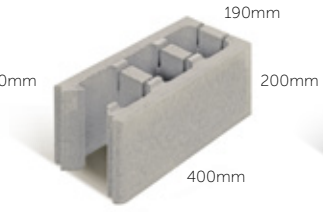

Versaloc® End Unit

No. per m²	-
Approx. Weight	19.09kg
No. per pallet	96 (48 Full, 48 Half)

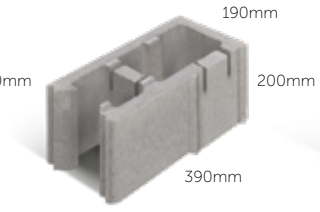

Versaloc® Corner Unit

No. per m²	-
Approx. Weight	15.38kg
No. per pallet	72 (36 Left, 36 Right)

Right corner shown.
Sold as a pair in left and right hand units.

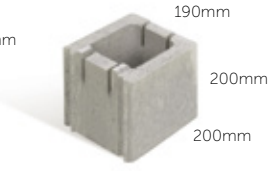

Versaloc® Half End Unit

No. per m²	-
Approx. Weight	9.01kg
No. per pallet	96 (48 Full, 48 Half)

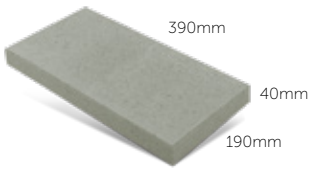

Versaloc® Capping Unit

No. per l/m	2.56 units
Approx. Weight	6.99kg
No. per pallet	132

- ✔ Specialty corner end units and caps
- ✔ Budget friendly DIY wall
- ✔ Great for retaining soil

TIP
To finish walls, remove lugs from top course with bolster and glue down capping unit.

Scan to watch how.

Maximum Unreinforced Height - 600mm + cap (3 courses) or up to 1200mm + cap (6 courses) with reinforcement

Consult your local council for all walls over 800mm in height

CREATE CURVES | GARDEN BEDS | STRAIGHT WALLS | STEPS | SETBACK WALLS | SUITABLE WITH TORPEDO™ | UNREINFORCED HEIGHT 750MM

Meadow Stone

Meadow Stone is a multi piece retaining wall system featuring three different block sizes which allows you to create natural looking garden and retaining walls with the random appearance of real stone.

Bondi Sand

Blue Mountain

Due to natural variations in the raw materials we use, colours may vary from batch to batch. Always sight a physical sample before purchase.

Meadow Stone 400mm Unit

No. per m^2	8.3 units
Approx. Weight	20.7kg
No. per pallet	60

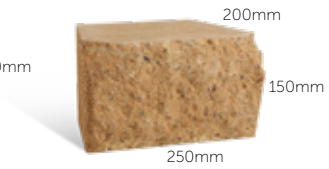

Meadow Stone 250mm Unit*

No. per m^2	8.3 units per pair
Approx. Weight	23kg per pair
No. per pallet	60 pairs

*150 and 250 units are sold as a pair

Meadow Stone 150mm Unit*

No. per m^2	8.3 units per pair
Approx. Weight	23kg per pair
No. per pallet	60 pairs

*150 and 250 units are sold as a pair

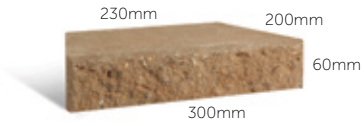

Meadow Stone Cap

No. per m^2	50 units
Approx. Weight	7.0kg
No. per pallet	168

- ✔ Three block sizes for random natural looking walls
- ✔ Speciality capping unit for a chic finish
- ✔ Premium split face surface texture

Maximum Unreinforced Height - 750mm (5 courses)

GARDEN BEDS | STRAIGHT WALLS | CREATE CURVES | GARDEN EDGING | VERTICAL WALLS | UNREINFORCED HEIGHT 500MM

Miniwall®

Create curves, straight walls and full circles with this light weight, DIY-friendly garden block. Miniwall has a finished, split face texture on both faces of the block which means you can create walls, edges and circles that look good from every angle.

Oatmeal

Charcoal

Due to natural variations in the raw materials we use, colours may vary from batch to batch. Always sight a physical sample before purchase.

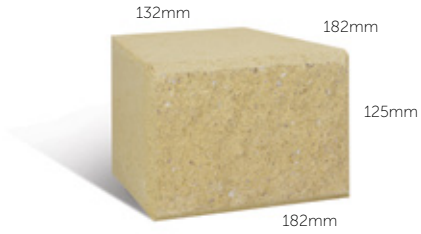

Miniwall® Standard Unit

No. per m^2	50 units (solid wall)
Approx. Weight	7.4kg
No. per pallet	180

- ✔ Easily build your own straight, curved or circular walls
- ✔ Textured finish on both faces of the block
- ✔ Stack blocks together using landscape grade adhesive between courses
- ✔ No capping unit required to finish the wall

Maximum Unreinforced Height - 500mm (4 courses)

CREATE CURVES | GARDEN EDGING | STRAIGHT WALLS | GARDEN BEDS | SETBACK WALLS | SUITABLE WITH TORPEDO™ | UNREINFORCED HEIGHT 600MM

Manor Stone

Manor Stone is the perfect DIY retaining wall block for creating curved and straight garden walls, garden beds and planter boxes. Light in weight and featuring a rear lip locking system to make stacking blocks easy, it is available in two colours to compliment any home.

Oatmeal

Charcoal

Due to natural variations in the raw materials we use, colours may vary from batch to batch. Always sight a physical sample before purchase.

Manor Stone Standard Unit

No. per m^2	34 units
Approx. Weight	11.1kg
No. per pallet	144

- ✔ Contemporary slimline profile for linear look
- ✔ Crunched face texture provides natural stone like aesthetic
- ✔ Build unreinforced walls to 600mm in height (6 courses)

Maximum Unreinforced Height - 600mm (6 courses)

CREATE CURVES | GARDEN EDGING | STRAIGHT WALLS | GARDEN BEDS | STEPS | SETBACK WALLS | SUITABLE WITH TORPEDO™ | UNREINFORCED HEIGHT 1040MM

Windsor™ Stone

Create retaining and garden walls to 1 metre in height without reinforcement with DIY friendly Windsor Stone blocks. With a rear lip locking system to make stacking blocks even easier, you can effortlessly build great looking concave, convex and curved walls.

Oatmeal

Sunstone

Charcoal

Due to natural variations in the raw materials we use, colours may vary from batch to batch. Always sight a physical sample before purchase.

Windsor™ Stone Standard Unit

No. per m^2	26 units
Approx. Weight	13.8kg
No. per pallet	120

- ✔ Crunched stone-like face texture for natural aesthetic appeal
- ✔ Each block includes rear locking lip for easy DIY building
- ✔ Build unreinforced walls to 1040mm (seek council approval)

Maximum Unreinforced Height - 1040mm (8 courses)

CREATE CURVES | GARDEN EDGING | STRAIGHT WALLS | GARDEN BEDS | SETBACK WALLS | SUITABLE WITH TORPEDO™ | UNREINFORCED HEIGHT 300MM

Hudson Stone

Hudson Stone is an attractive, DIY friendly garden edging block which is perfect for creating garden beds and borders. These easy to handle blocks simply stack on top of one another to create curved or straight walls up to 300mm high, ideal for separating your lawn from the garden edge

Oatmeal

Sunstone

Charcoal

Due to natural variations in the raw materials we use, colours may vary from batch to batch. Always sight a physical sample before purchase.

Hudson Stone Standard Unit

No. per l/m	5 units
Approx. Weight	4.7kg
No. per pallet	240

- ✔ Compact, light and easy to install
- ✔ Create concave, convex, serpentine or straight walls
- ✔ Effective for small edges, tree circles and separating the lawn from garden beds

Maximum Unreinforced Height - 300mm (3 courses)

GARDEN EDGING

Lawn Edge

Separate your lawn from the garden bed, stop turf runners from creeping into your plants and create well defined zones with this easy to install, light-weight edging brick.

Oatmeal

Charcoal

Due to natural variations in the raw materials we use, colours may vary from batch to batch. Always sight a physical sample before purchase.

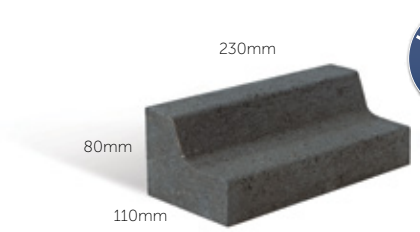

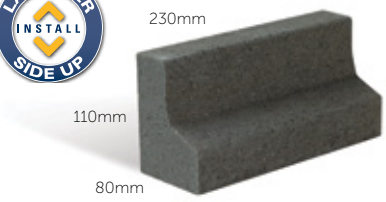

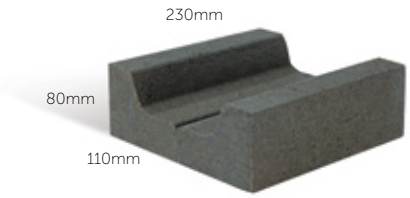

Lawn Edge Standard Unit

No. per l/m	4.35 units
Approx. Weight	2.9kg
No. per pallet	280

Lawn Edge Standard Unit
(Shown laid alternative way)

Lawn Gutter (Uses 2 units)

- ✔ Versatile DIY-friendly garden edging unit for use in home gardening projects
- ✔ Separate the lawn from the garden bed
- ✔ Lay two ways for high edge or mowing strip
- ✔ Lay 2 units together to create a channel or gutter through your garden

Torpedo™ Base Block

The Torpedo™ Base Block is the quickest and easiest way to take the guesswork out of wall construction by providing a simple and time saving method for creating durable and level foundations.

Torpedo™ use with straight wall

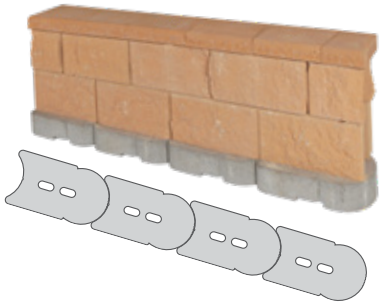

Torpedo™ use with curved wall

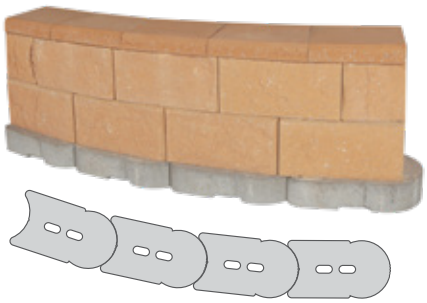

Create easy curves

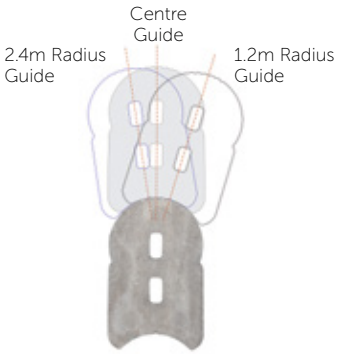

Torpedo™ Base Block Standard Unit

No. per l/m	2.5 units
Approx. Weight	21.28kg
No. per pallet	72

- ✔ May replace the need for roadbase and compaction in unreinforced walls
- ✔ Saves money usually wasted burying the first course
- ✔ Suitable for use under any segmental block wall system
- ✔ Reduce challenges with screeding and levelling
- ✔ Straight Retaining Walls and Curved Retaining Walls (Concave and Convex)
- ✔ Lay Torpedo™ blocks onto cement stabilised sand and tap level

How to Build a Retaining Wall

Before you commence any retaining wall project over 800mm in height, please check your local council specific requirements. Council regulations may require walls over a certain height to be designed and certified by a qualified engineer.

YOUR CHECKLIST

- ✔ Safety gear (breathing, hand and eye protection)
- ✔ Wheel barrow
- ✔ Shovel
- ✔ Tape measure
- ✔ String line
- ✔ Pegs or stakes
- ✔ Spirit level
- ✔ Walling blocks
- ✔ Plate compactor
- ✔ Broom/Brush
- ✔ Drainage agpipe
- ✔ Crushed roadbase (for base)
- ✔ Sand (for base)
- ✔ Brick saw (for cutting block)
- ✔ 10-20mm drainage aggregate (for backfill)

General Step by Step Guide

Flexible Base (using either compacted roadbase or Torpedo™ blocks)

Wall installation may vary from product to product

STEP 1

Marking Out

Using marking paint and string line, mark out the line of your wall.

STEP 2

Excavation

Remove soil and turf to excavate trench.

TIP
Always call Dial Before You Dig on 1100 before excavating.

STEP 3

Preparing the Footing

Bring in roadbase and compact before screeding a sand and cement mix bed.

STEP 4

Laying the First Course

Start at either the lowest point, or the most visible section of your wall.

Place blocks and check for level side to side and front to back.

STEP 5

Infill and Backfill with Aggregate

When using cored blocks it's vital you infill the cores in each block with free draining aggregate like blue metal.

You must also backfill with the same aggregate behind your wall to form a drainage column.

STEP 6

Drainage agpipe

It's imperative your wall does not have water pressure massing behind it.

Install a drainage agpipe and divert water away from back of wall.

STEP 7

Laying subsequent courses

Continue laying blocks and be sure to remove debris from top and bottom of blocks with a brush and check for level.

STEP 8

Finishing the wall

Finish the wall neatly with wall caps where required. Bring in soil to finish behind the wall.

Typical Installation Details

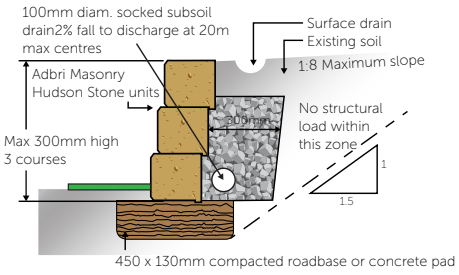

NOTE: Allow minimum 50mm embedment to cover leveling pad

Hudson Stone

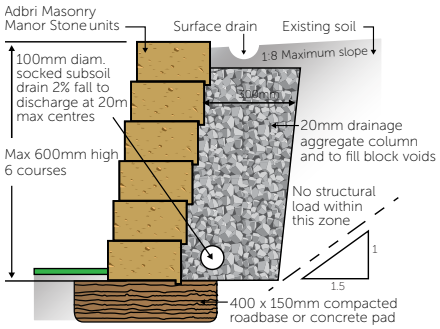

NOTE: Allow minimum 50mm embedment to cover leveling pad

Manor Stone

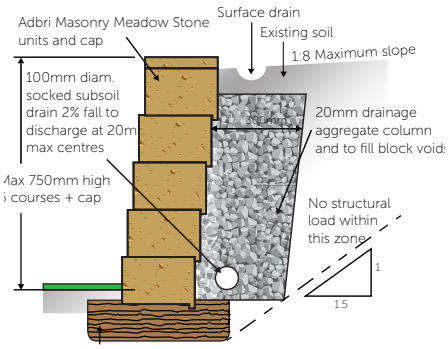

NOTE: Allow minimum 50mm embedment to cover leveling pad

Meadow Stone

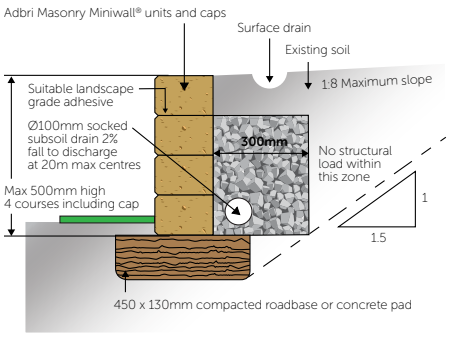

NOTE: Allow minimum 50mm embedment to cover levelling pad

Miniwall®

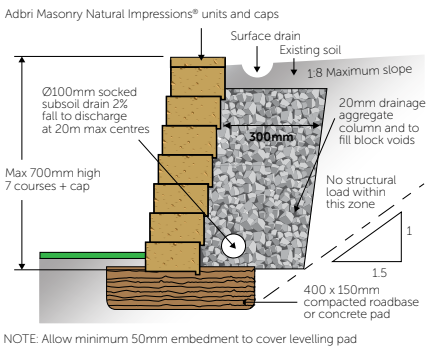

NOTE: Allow minimum 50mm embedment to cover levelling pad

Natural Impressions®
Duostone and Flagstone

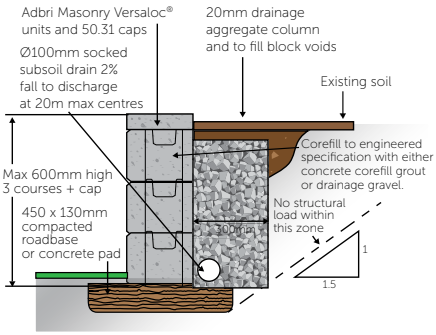

NOTE: Allow minimum 50mm embedment to cover leveling pad
For low non-structural walls see Versaloc® Walling System Brochure for more information.

Versaloc®

NOTES

- All cross sectional diagrams are not to scale.
- All retaining walls are designed to CMAA document .MA53 (Segmental Concrete Gravity Retaining Walls Design and Construction Guide).
- All retaining walls shall comply with AS 4678 Structure Classification A.
- These diagrams are only applicable to retaining walls that incorporate an impermeable surface membrane and drainage system such that there can be no ingress of any water into the soil behind the retaining wall.
- These diagrams are applicable to cuts in insitu soils. The diagrams are not applicable to cohesive fill.
- All retaining walls are designed for an imposed surcharge load of 2.5 kPa. If imposed loads greater than 2.5 kPa are expected, these designs will not be appropriate.
- Levelling pad: a levelling pad may consist of compacted material (5% cement stabilised crushed rock) for wall heights up to 800mm. Walls over 800mm high must use 20MPa concrete for the levelling pad.
- This design information is a guide only. For walls exceeding the nominated heights as above, please refer to the Retaining Wall Systems Technical Brochure. Walls exceeding maximum heights shown will need to be designed and certified by a qualified engineer. Please consult your local council to confirm if you require council approval for your proposed retaining wall.

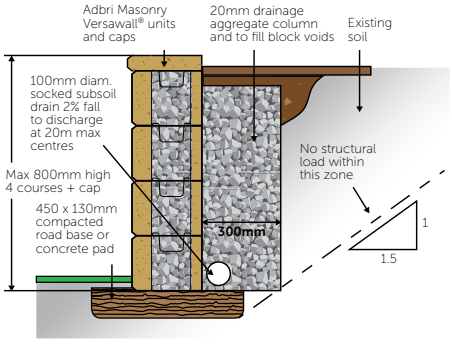

NOTE: Allow minimum 50mm embedment to cover levelling pad

Versawall®

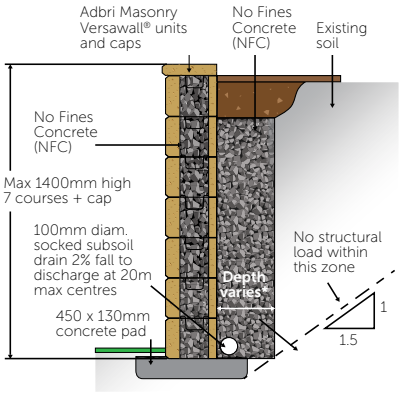

NOTE: Allow minimum 50mm embedment to cover levelling pad

Always seek engineering advice for walls exceeding maximum unreinforced height

* Dependent on height & soil conditions. Refer to Adbri Technical Retaining Wall brochure for required backfill of No Fines Concrete

Versawall® - No Fines

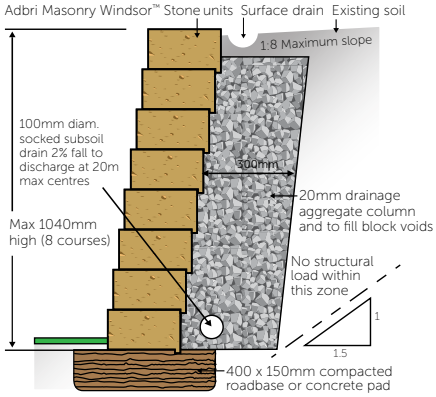

NOTE: Allow minimum 50mm embedment to cover leveling pad

Windsor™ Stone

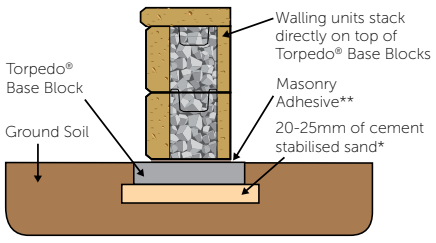

* Cement stabilised sand can either be purchased pre-mixed or simply mix in 5% dry cement into your bedding sand

** Masonry adhesive is required for units without 'rear lip' systems

Max unreinforced heights will be dependent on individual product specifications

Torpedo® Base Block

BRICKS | BESSER® BLOCKS | PAVERS | RETAINING WALLS

AdbriMasonryAus adbrimasonry

1300 365 565 | www.adbrimasonry.com.au | enquiries@adbri.com.au

Free pallet collection service freecall 1800 674 961 or drop pallets back to place of purchase or lodge your pallet pick up online at adbrimasonry.com.au

Pallets remain Adbri Masonry property. Please telephone us for collection of pallets and keep pallets empty and stacked in a safe and accessible area for collection.

adbri MASONRY
an ADBRI company

Landscape Solutions Retaining Walls (South Queensland) - February 2021 - ABM1040
Adbri Masonry Pty Ltd | ABN: 31 009 687 521

Miniwall®, Natural Impressions® Duostone, Natural Impressions® Flagstone, Torpedo™, Versawall®, Versaloc®, Windsor™ Stone and the Adbri Masonry logo are registered trademarks of Adbri Masonry Pty Ltd